Best solution
Better integration

BIPV PARAPET

PV Parapets

MATERIALS

- 6 mm tempered glass high-transparency
- 0.76 mm PVB layer
- 0.21 mm PhotoVoltaic cells
- 0.76 mm PVB layer
- 6 mm tempered glass

Composition:

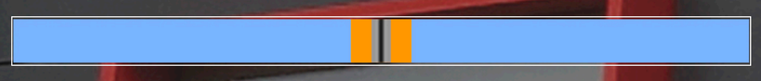

12 CELLS PV PANEL

Size: 700 x 600 x 14 mm
Weight: 13.9 kg
Matrix: 4 x 3
Transparency: 29.8 %
Power:
M156-12-65W
P156-12-55W

18 CELLS PV PANEL

Size: 1100 x 600 x 14 mm
Weight: 21.7 kg
Matrix: 6 x 3
Transparency: 33.0 %
Power:
M156-18-100W
P156-18-85W

24 CELLS PV PANEL

Size: 1400 x 600 x 14 mm
Weight: 27.6 kg
Matrix: 8 x 3
Transparency: 29.8 %
Power:
M156-24-130W
P156-24-115W

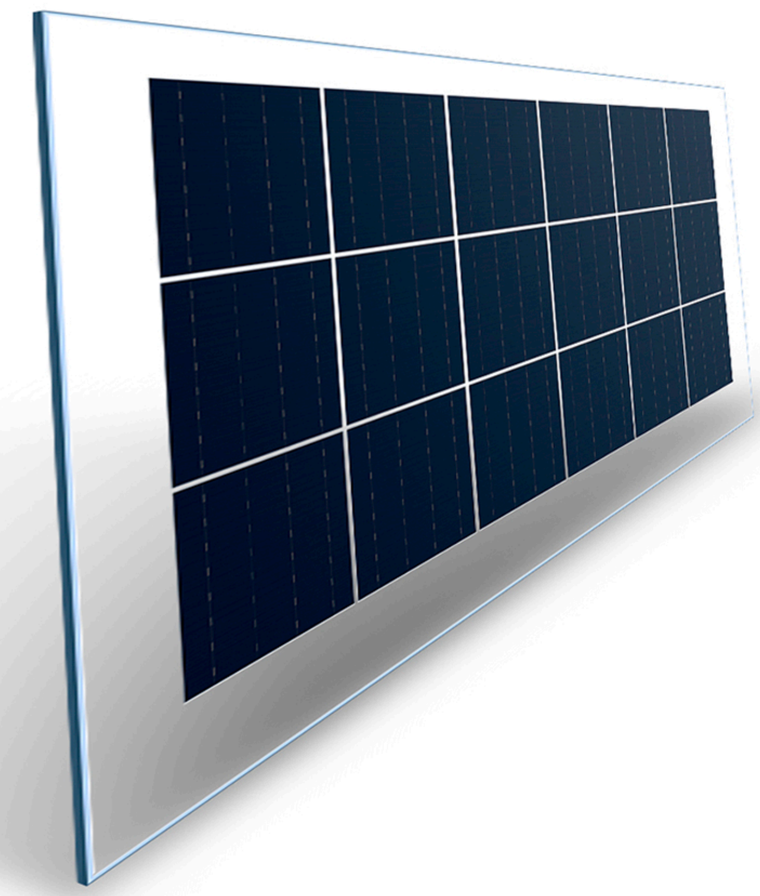

Photovoltaic parapets are an alternative way to transform materials that are normally used in construction in energetically-active materials to generate shades.

www.solarinnova.net

Paseo de los Molinos, 12. 03660 - Novelda (Alicante) SPAIN

BIPV

One of the great advantages of Solar Innova's architectural integration photovoltaic glasses is that they act as a filter for ultraviolet and infrared radiation, both harmful to health, in addition to generating clean and free energy thanks to the sun.

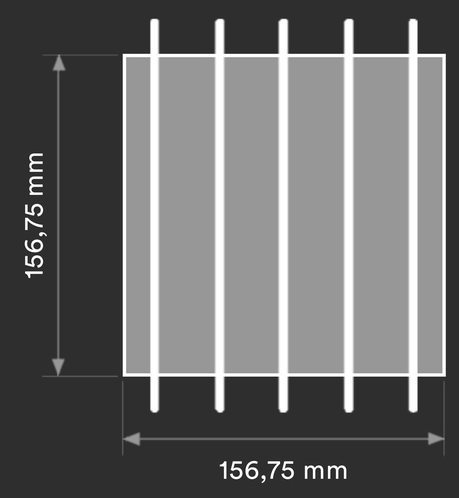

- sc-Si PV
- 5bb connection
- hihg efficiency

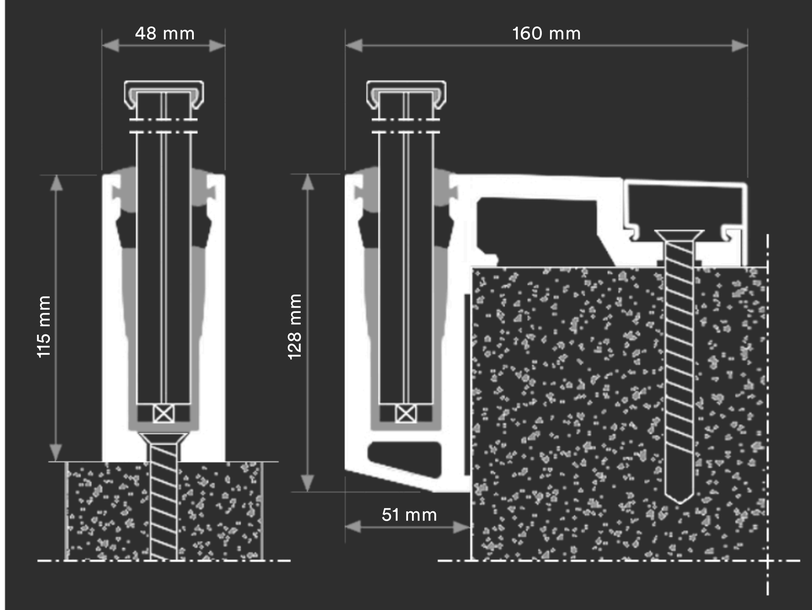

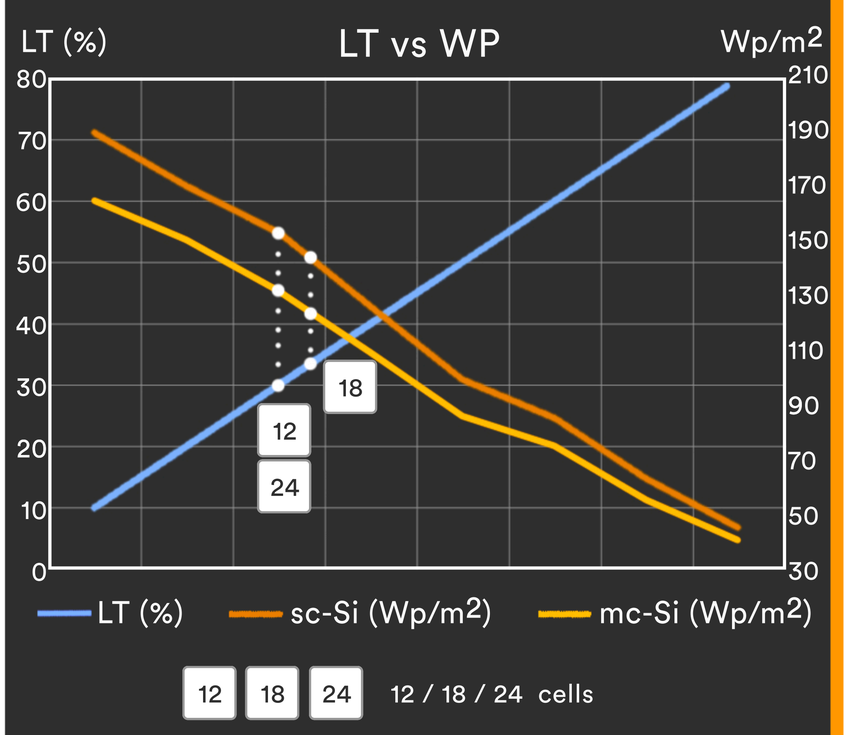

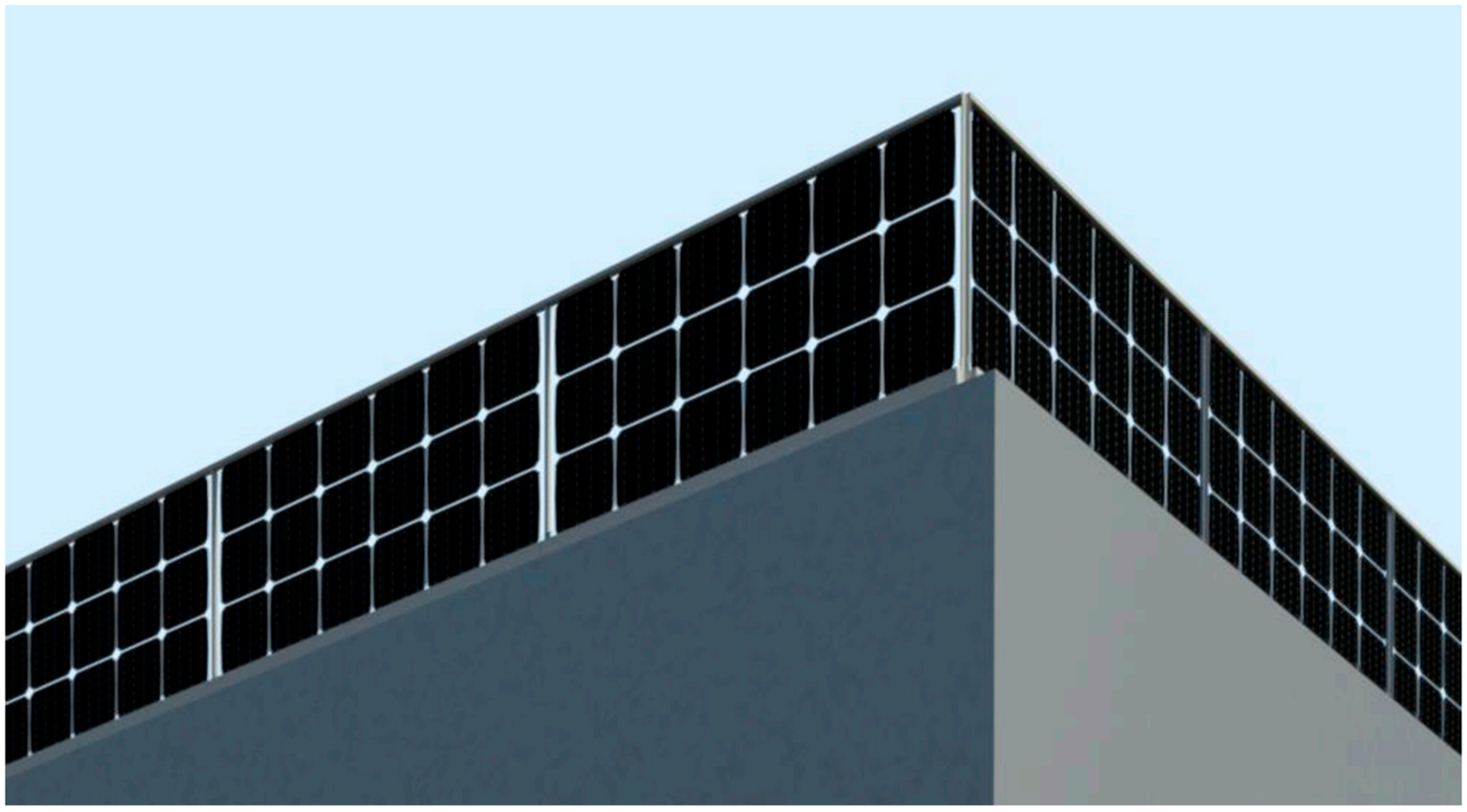

6 models

Model	BIPV-CT-M156-12	BIPV-CT-P156-12	BIPV-CT-M156-18	BIPV-CT-P156-18	BIPV-CT-M156-24	BIPV-CT-P156-24
Cell type	Monocrystalline	Polycrystalline	Monocrystalline	Polycrystalline	Monocrystalline	Polycrystalline
Cells number	12 uds	12 uds	18 uds	18 uds	24 uds	24 uds
Cell size	156.75 x 156.75 mm	156.75 x 156.75 mm	156.75 x 156.75 mm	156.75 x 156.75 mm	156.75 x 156.75 mm	156.75 x 156.75 mm
Size	700 x 600 mm	700 x 600 mm	1100 x 600 mm	1100 x 600 mm	1400 x 600 mm	1400 x 600 mm
Thickness	14 mm	14 mm	14 mm	14 mm	14 mm	14 mm
Area	0.42 m²	0.42 m²	0.66 m²	0.66 m²	0.84 m²	0.84 m²
Power	65 Wp	55 Wp	100 Wp	85 Wp	130 Wp	115 Wp
Transparency	29.8 %	29.8 %	33.0 %	33.0 %	29.8 %	29.8 %

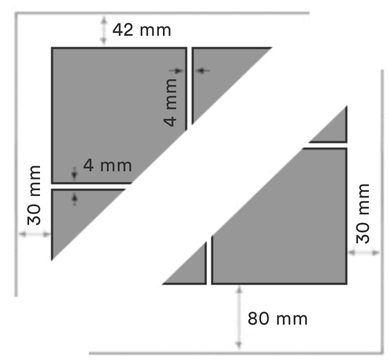

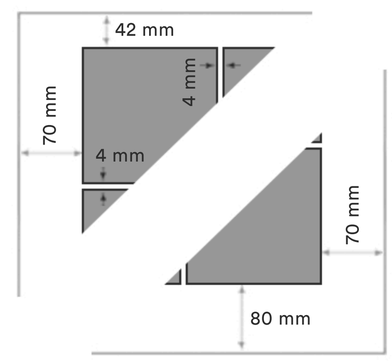

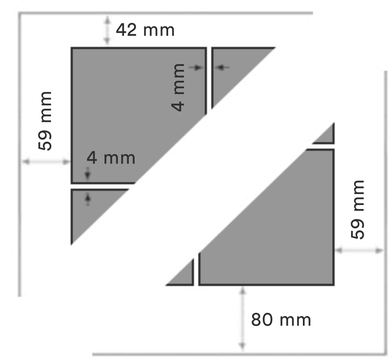

+ Energy + Saving – Outlay – CO2

2014/35/EU
EN 50583-1
EN 14449

ISO 9001
ISO 14001
ISO 45001

IEC/EN 61215
IEC/EN 61730
IEC/EN 63092

nZEB Nearly Zero Energy Buildings

ISO 1064 Protocolo GHG

WEEE 2002/96/CE

Fast Return Of Investment material

12/25 years guarantee

Photovoltaic Architecture

High satisfaction

High resistance

Low deterioration

The specifications and technical data may be subject to possible modifications without notice.