Best solution
Better integration

BIPV CURTAIN WALL

PV Panel

MATERIALS

- 3 - 12 mm tempered glass high-transparency
- 0.76 mm PVB layer
- 0.21 mm PhotoVoltaic cells
- 0.76 mm PVB layer
- 3 - 12 mm tempered glass

COMPOSITION

Insulation Chamber/s:

- 6/9/12/15 mm (air/argon)

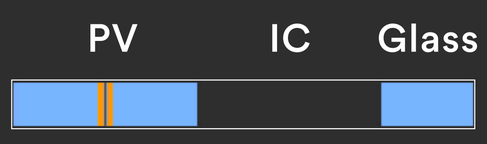

Size:

Min: 180 x 180 mm
Max: 4500 x 2500 mm

Junction Box:

Border
Back

Cable:

4 mm²

Connectors:

Type 3
Type 4

Solar Curtain Wall are a perfect solution as they constitute a range of active technological glass capable to generate electrical energy, which can be used in new construction and renovation buildings, allowing electrical autonomy and energy savings.

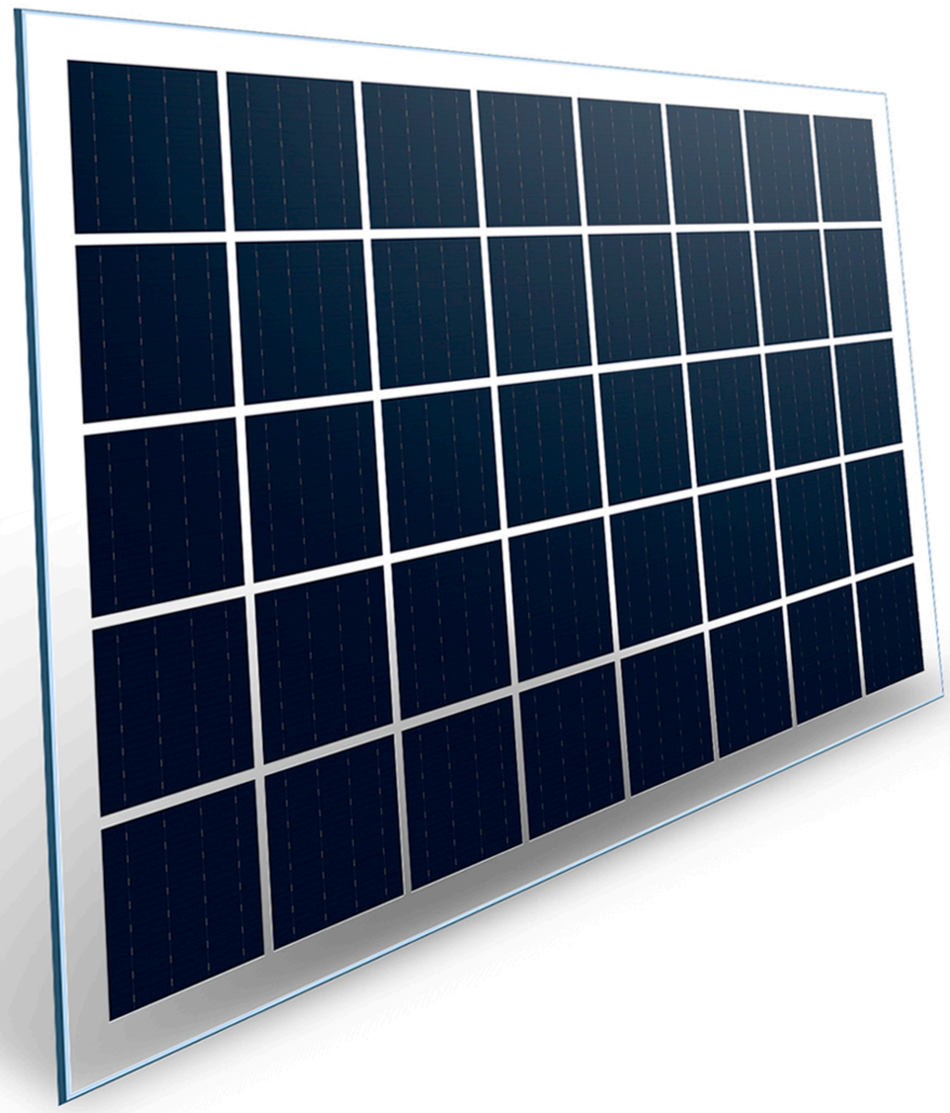

www.solarinnova.net

Paseo de los Molinos, 12. 03660 - Novelda (Alicante) SPAIN

BIPV

The architectural integration of photovoltaic facades in construction makes it possible to create glazed surfaces that, in addition to being an esthetic and functional novelty, generate electrical energy.

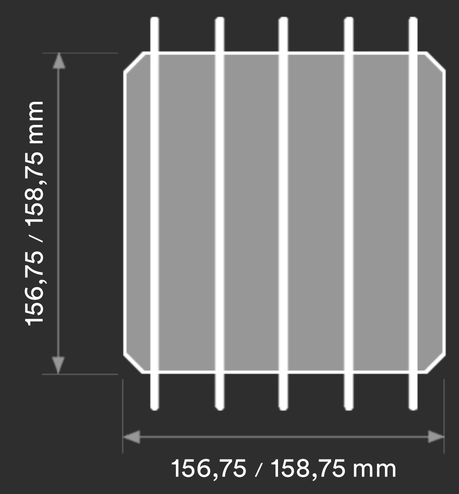

Monocrystalline
- sc-Si PV
- 5bb connection
- high efficiency

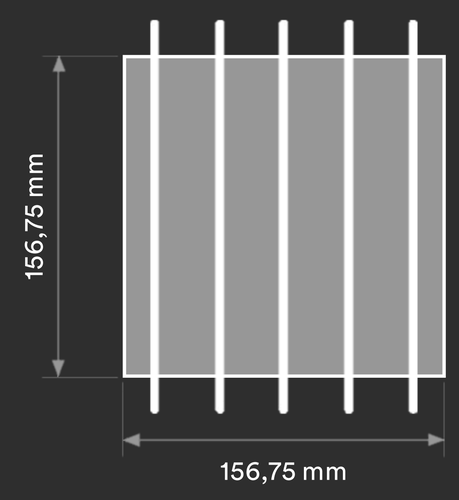

Polycrystalline
- mc-Si PV
- 5bb connection
- high efficiency

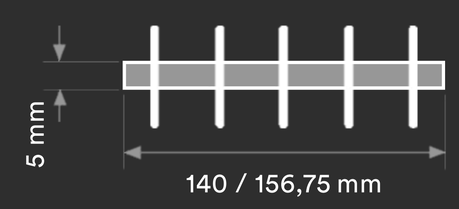

Monocrystalline
- sc-Si PV
- 5bb connection
- high efficiency

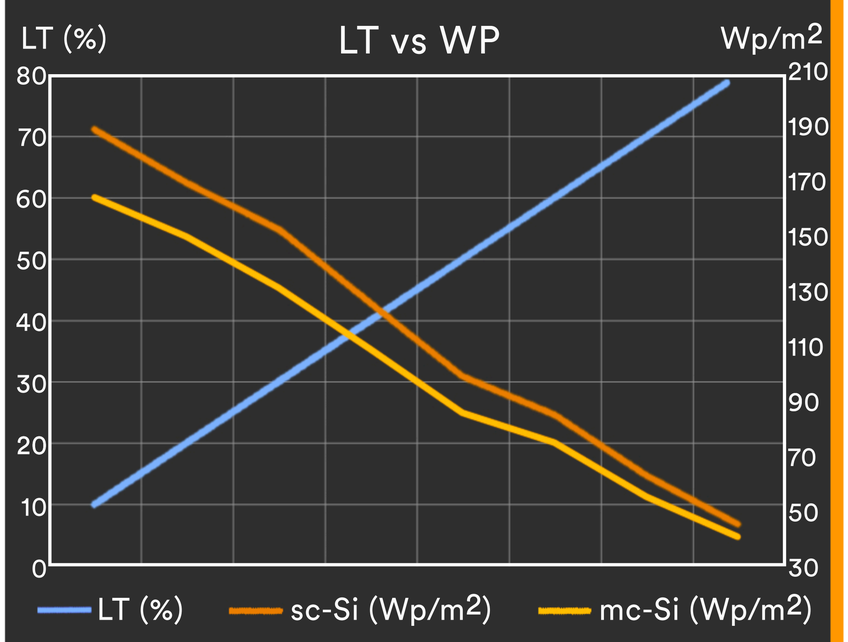

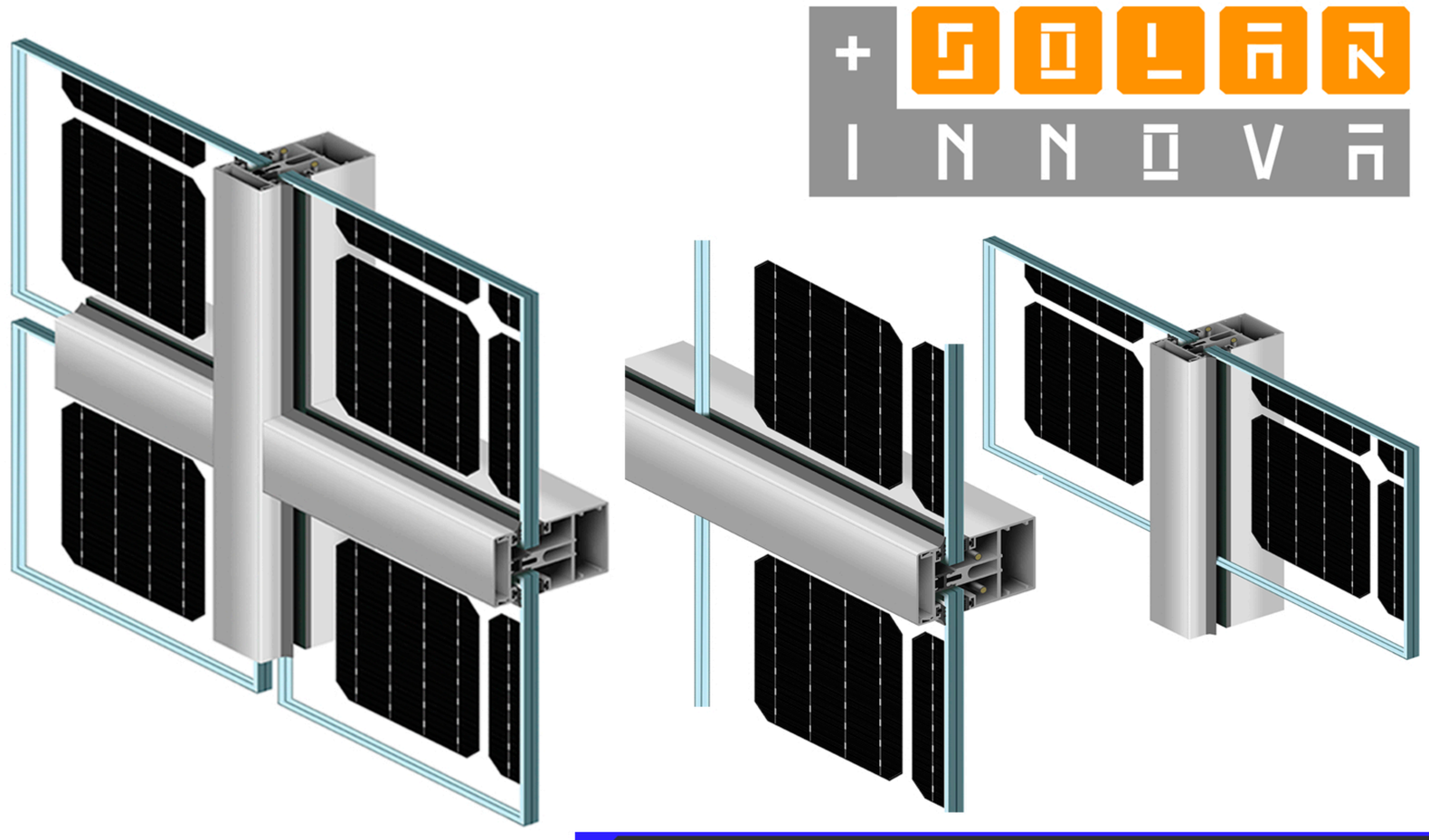

Mullions & Transoms

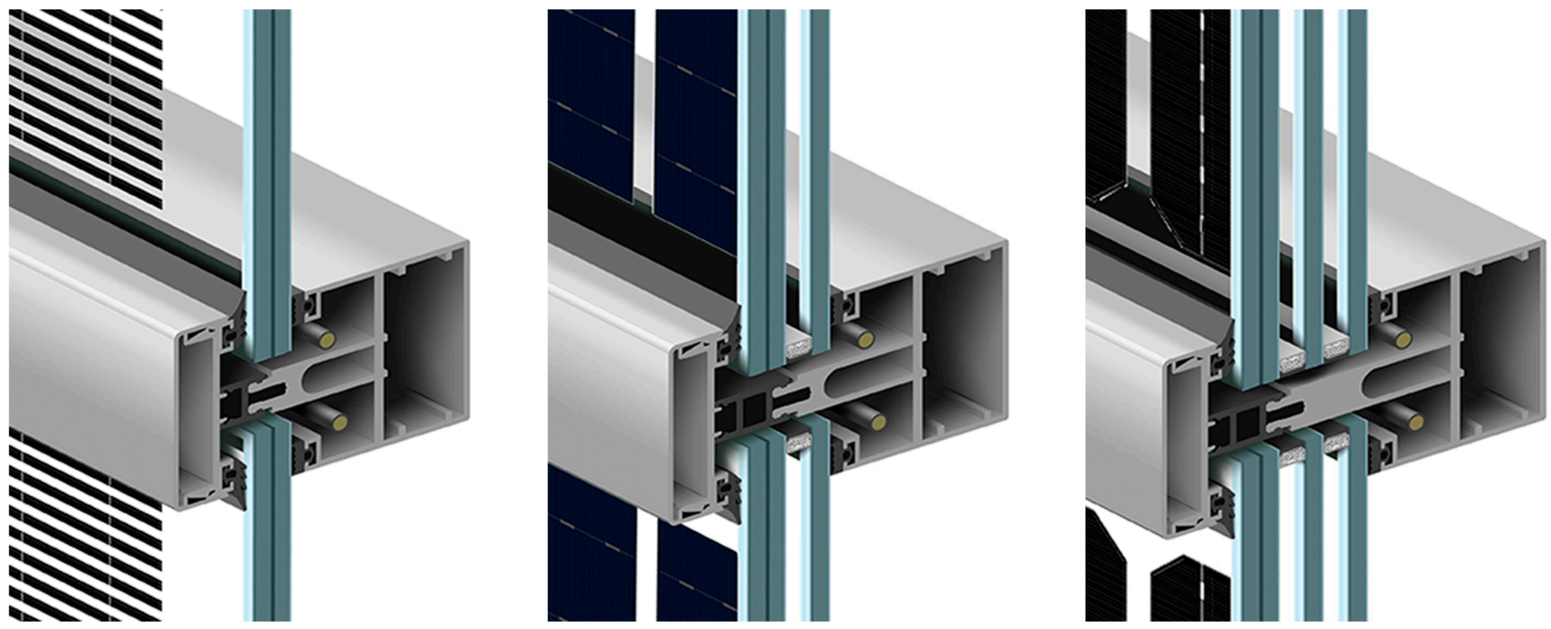

Thickness & Insulation

Customized Transparency

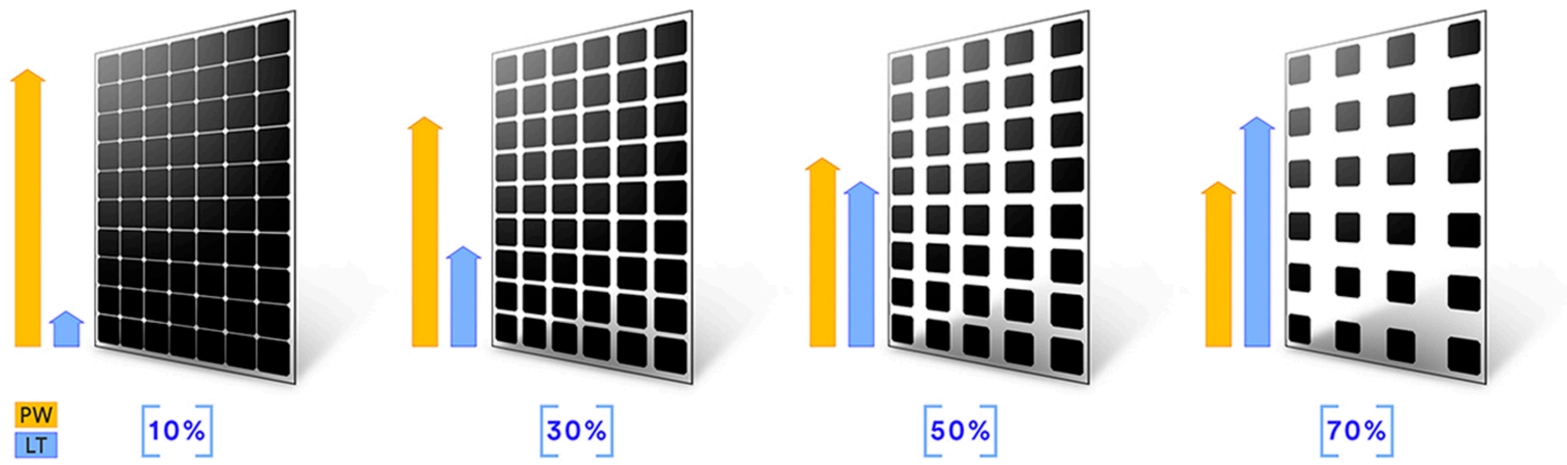

+ Energy + Saving – Outlay – CO_2

- 2014/35/EU
- EN 50583-1
- EN 14449

- ISO 9001
- ISO 14001
- ISO 45001

- IEC/EN 61215
- IEC/EN 61730
- IEC/EN 63092

- nZEB Nearly Zero Energy Buildings
- ISO 1064 GHG Protocol
- WEEE 2002/96/CE
- Fast Return Of Investment material
- 12/25 years guarantee
- Photovoltaic Architecture
- High satisfaction
- High resistance
- Low deterioration

The specifications and technical data may be subject to possible modifications without notice.