Best solution
Better integration

BIPV PORCH

PV Porches

MATERIALS

- 5 mm tempered glass high-transparency
- 0.76 mm PVB layer
- 0.21 mm PhotoVoltaic cells
- 0.76 mm PVB layer
- 5 mm tempered glass

Composition:

24 CELLS PV PANEL

SI-ESF-M-BIPV-CT-M158-24

Size: 740 x 1100 x 12 mm
Weight: 23 kg
Matrix: 4 x 6
Transparency: 25.7 %
Power: 135 Wp
Connectors: Type 3

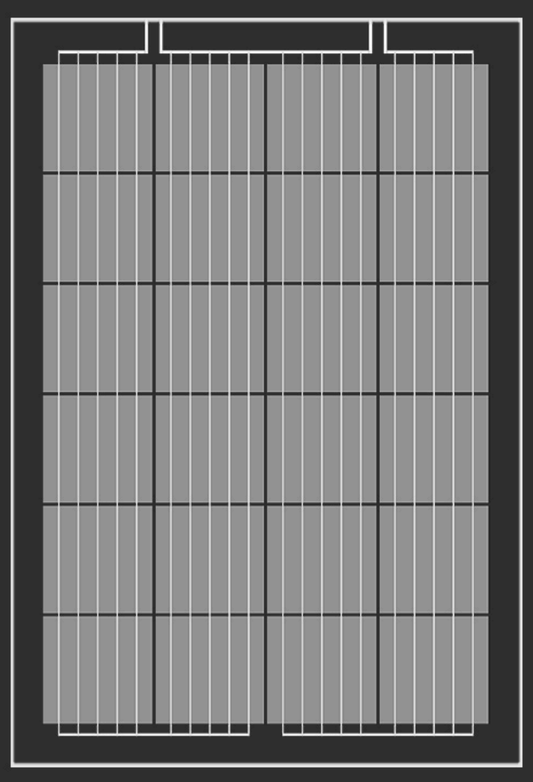

+SOLAR INNOVA

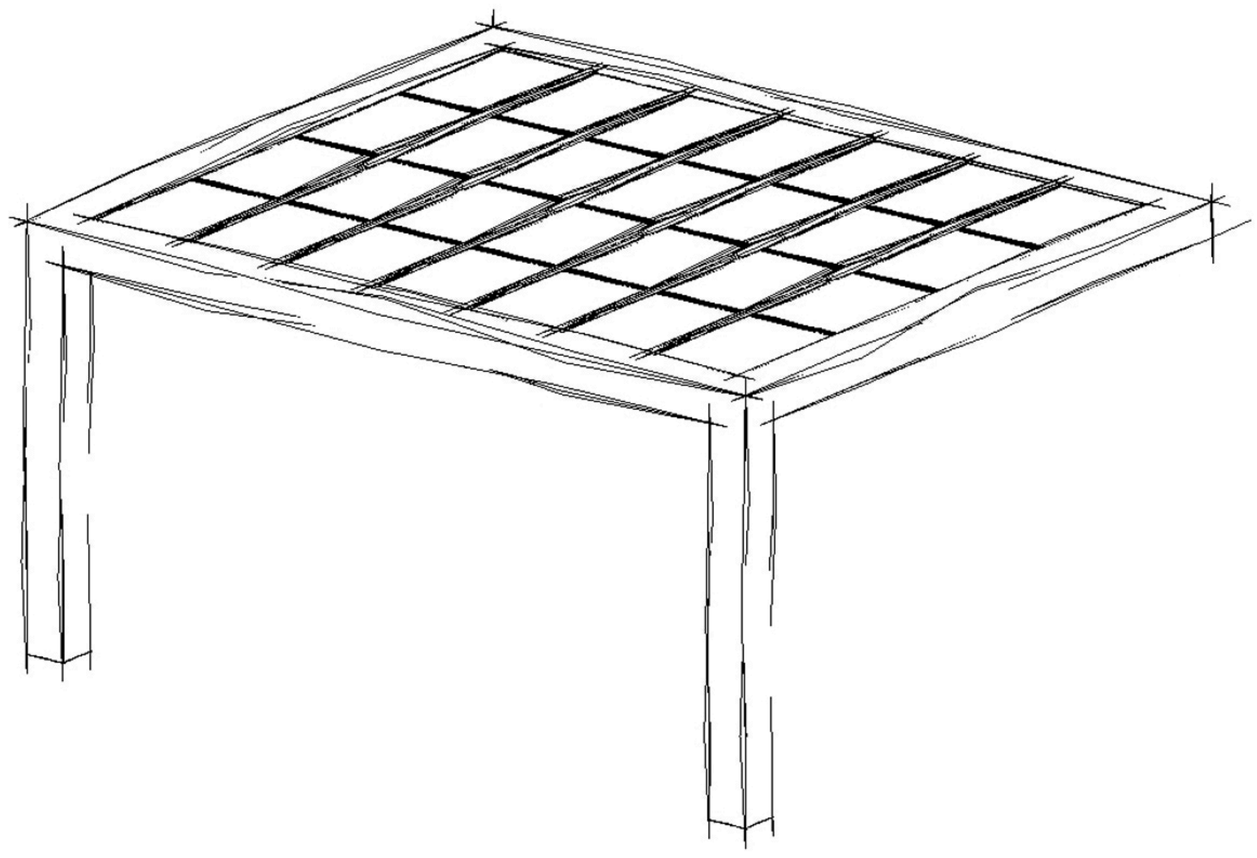

The photovoltaic porches are an alternative form to replace the materials which traditionaly are only used in the construction to generate shades.

www.solarinnova.net

Paseo de los Molinos, 12. 03660 - Novelda (Alicante) SPAIN

BIPV

One of the great advantages of Solar Innova's architectural integration photovoltaic glasses is that they act as a filter for ultraviolet and infrared radiation, both harmful to health, in addition to generating clean and free energy thanks to the sun.

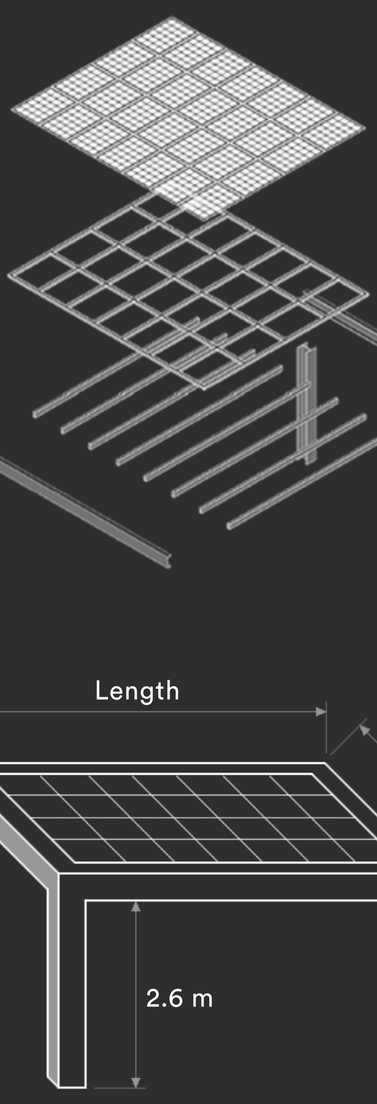

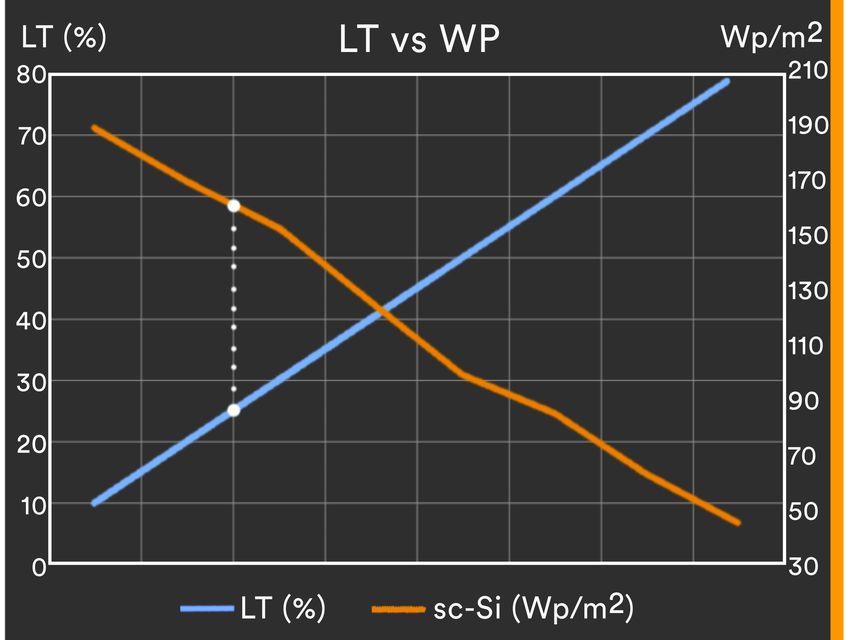

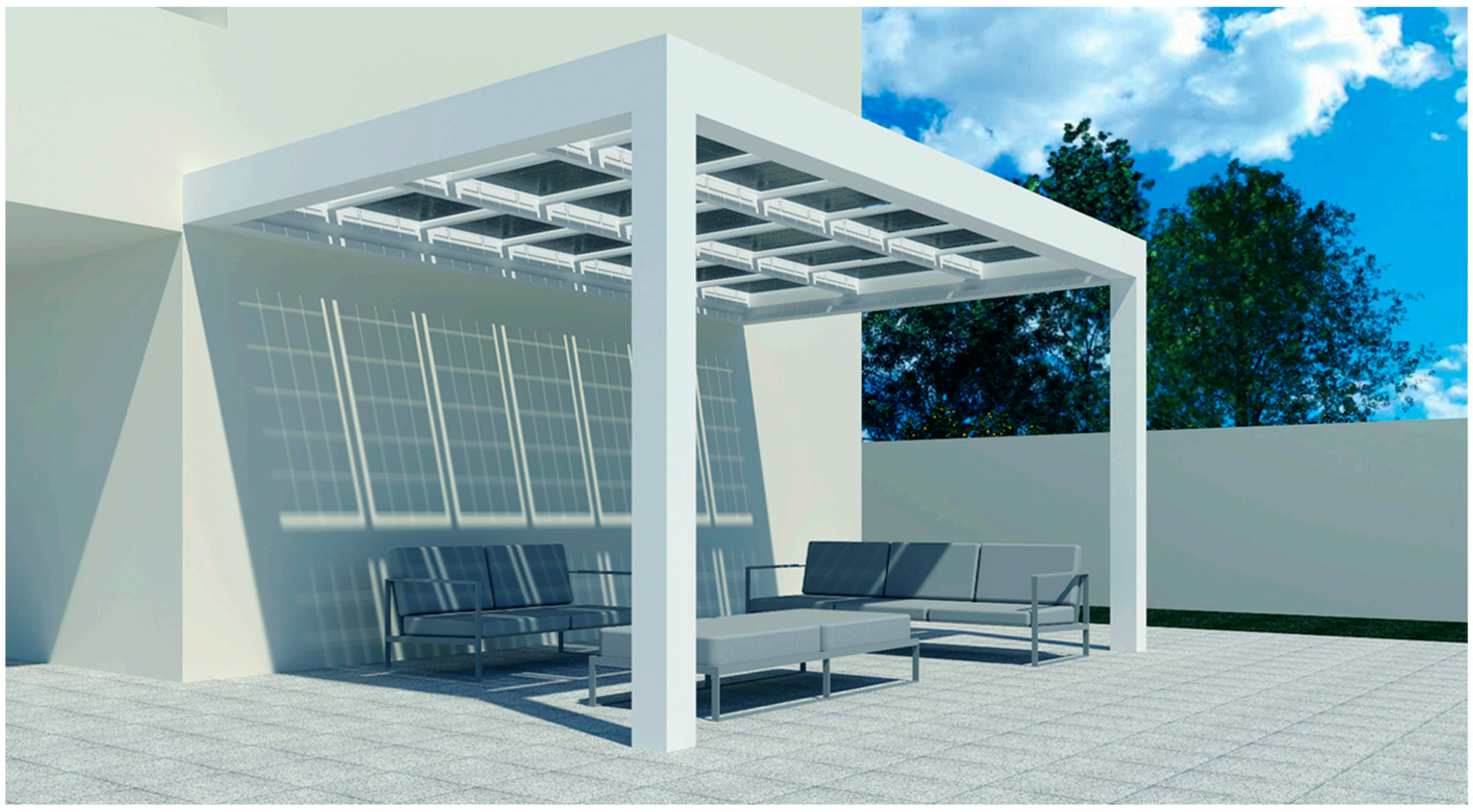

Integrated Photovoltaic

Nº Moduls	Max Power	Width x Length m	Area m²
2 x 2 → 4	540	1.773 x 2.620	4.65
2 x 3 → 6	810	1.773 x 3.765	6.67
2 x 4 → 8	1080	1.773 x 4.910	8.70
2 x 5 → 10	1350	1.773 x 6.055	10.74
2 x 6 → 12	1620	1.773 x 7.200	12.77
3 x 2 → 6	810	2.533 x 2.620	6.64
3 x 3 → 9	1215	2.533 x 3.765	9.54
3 x 4 → 12	1620	2.533 x 4.910	12.44
3 x 5 → 15	2025	2.533 x 6.055	15.34
3 x 6 → 18	2430	2.533 x 7.200	18.24
4 x 2 → 8	1080	3.293 x 2.620	8.63
4 x 3 → 12	1620	3.293 x 3.765	12.40
4 x 4 → 16	2160	3.293 x 4.910	16.17
4 x 5 → 20	2700	3.293 x 6.055	19.94
4 x 6 → 24	3240	3.293 x 7.200	23.71

Nº Moduls	Max Power	Width x Length m	Area m²
5 x 2 → 10	1350	4.053 x 2.620	10.62
5 x 3 → 15	2025	4.053 x 3.765	15.26
5 x 4 → 20	2700	4.053 x 4.910	19.90
5 x 5 → 25	3375	4.053 x 6.055	24.54
5 x 6 → 30	4050	4.053 x 7.200	29.18
6 x 2 → 12	1620	4.813 x 2.620	12.61
6 x 3 → 18	2430	4.813 x 3.765	18.12
6 x 4 → 24	3240	4.813 x 4.910	23.63
6 x 5 → 30	4050	4.813 x 6.055	29.14
6 x 6 → 36	4860	4.813 x 7.200	34.65
7 x 2 → 14	1890	5.573 x 2.620	14.60
7 x 3 → 21	2835	5.573 x 3.765	20.98
7 x 4 → 28	3780	5.573 x 4.910	27.36
7 x 5 → 35	4725	5.573 x 6.055	33.75
7 x 6 → 42	5670	5.573 x 7.200	40.13

+ Energy + Saving − Outlay − CO_2

2014/35/EU
EN 50583-1

ISO 9001
ISO 14001
ISO 45001

IEC/EN 61215
IEC/EN 61730
IEC/EN 63092

nZEB Nearly Zero Energy Buildings

ISO 1064 Protocolo GHG

WEEE 2002/96/CE

Fast Return Of Investment material

12/25 years guarantee

Photovoltaic Architecture

High satisfaction

High resistance

Low deterioration

The specifications and technical data may be subject to possible modifications without notice.