Barcelona
Spain

BIPV

PARAPETS + SKYLIGHTS

2020

PV PANEL PARAPET

SI-ESF-M-BIPV-BL-M156-30

- 10 mm tempered glass high-transparency
- 0.76 mm PVB layer
- 0.21 mm monocrystalline PV cells 156x156 mm
- 0.76 mm PVB layer
- 10 mm tempered glass

Size: 1105 x 860 x 14 mm

Matrix: 6 x 5

Transparency: 36%

Panel Power: 140 Wp

PV PANEL SKYLIGHT

SI-ESF-M-BIPV-CT-M156-60

Matrix: 6 x 10

Panel Power: 280 Wp

Total Power: 8,000 Wp

Quantity: 50 pcs

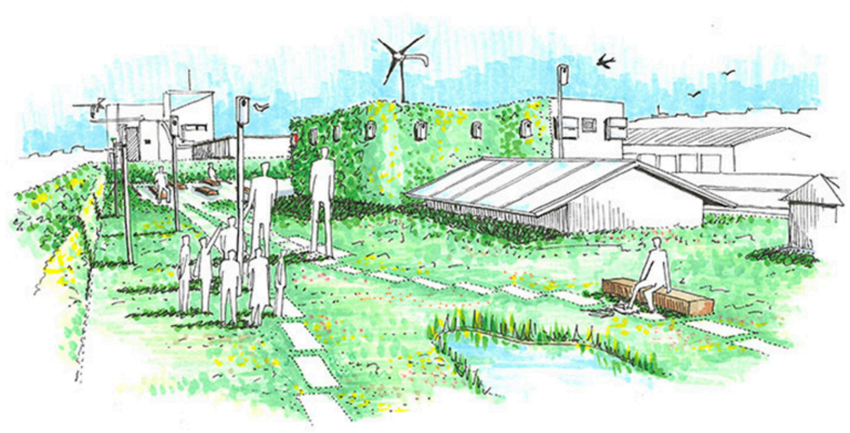

Solar parapets are a perfect solution as they constitute a range of active technological glass capable to generate electrical energy, which can be used in new construction and renovation buildings, allowing electrical autonomy and energy savings.

www.solarinnova.net

Paseo de los Molinos, 12. 03660 - Novelda (Alicante) SPAIN

BIPV

One of the great advantages of Solar Innova's architectural integration photovoltaic glasses is that they act as a filter for ultraviolet and infrared radiation, both harmful to health, in addition to generating clean and free energy thanks to the sun.

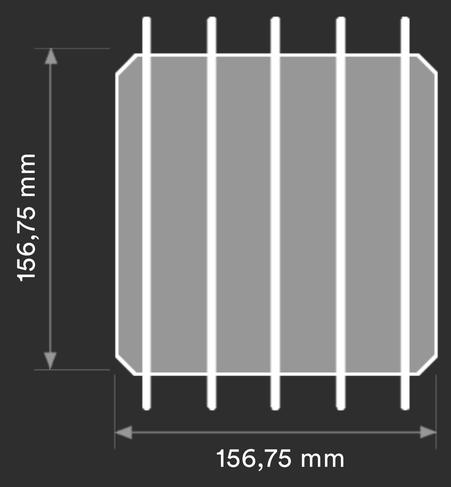

- sc-Si PV
- 5bb connection
- high efficiency

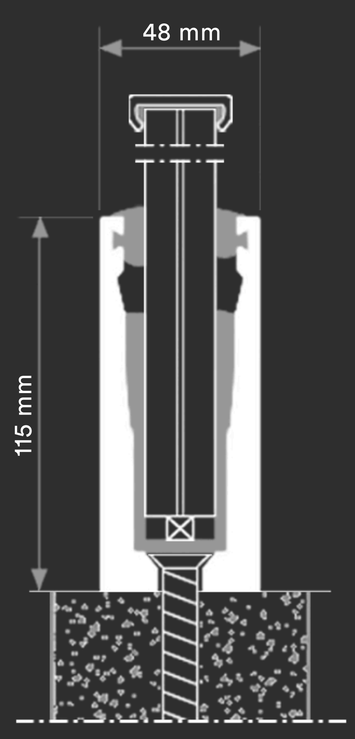

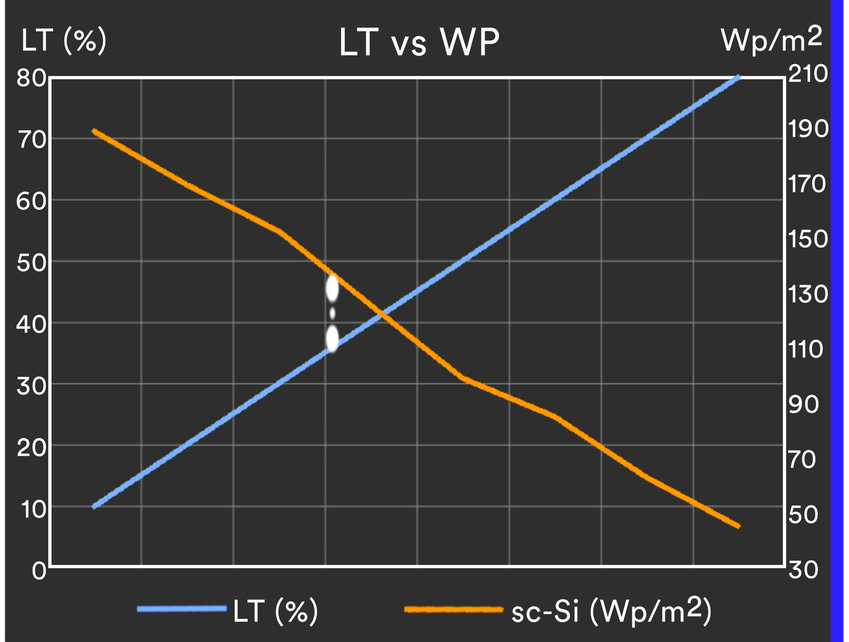

SI-ESF-M-BIPV-BL-M156-30

SI-ESF-M-BIPV-CT-M156-60

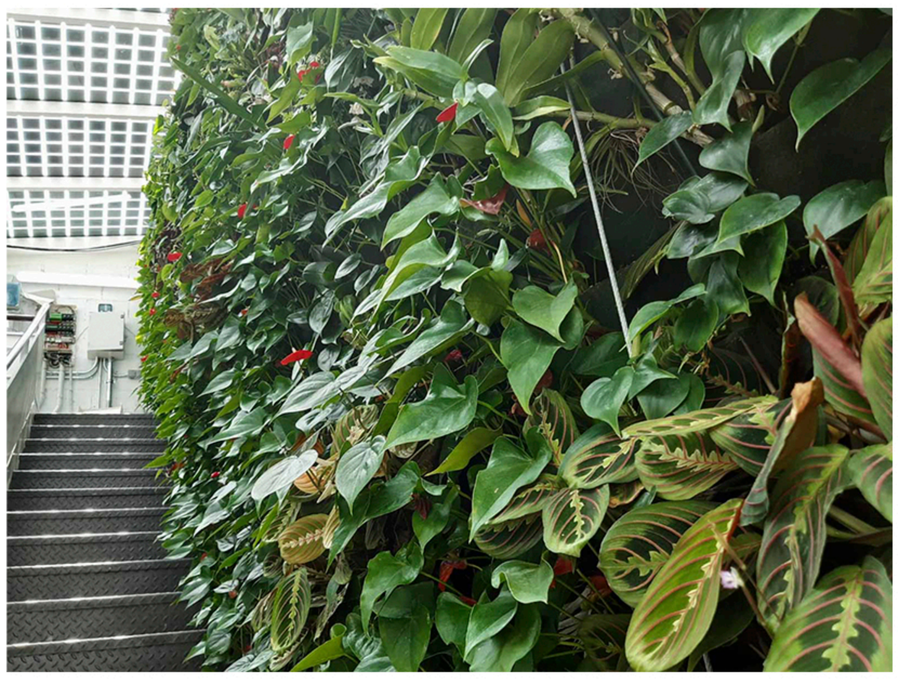

- Raising awareness by betting on renewable energy
- Integration of renewable energy in urban environments
- Advantage of unused areas
- Amortization of economic investments

+ Energy + Saving – Outlay – CO_2

2014/35/EU
EN 50583-1
EN 14449

ISO 9001
ISO 14001
ISO 45001

IEC/EN 61215
IEC/EN 61730
IEC/EN 63092

nZEB Nearly Zero Energy Buildings

ISO 1064 GHG Protocol

WEEE 2002/96/EC

Fast Return Of Investment material

12/25 years guarantee

Photovoltaic Architecture

High satisfaction

Custom design and production

Low degradation